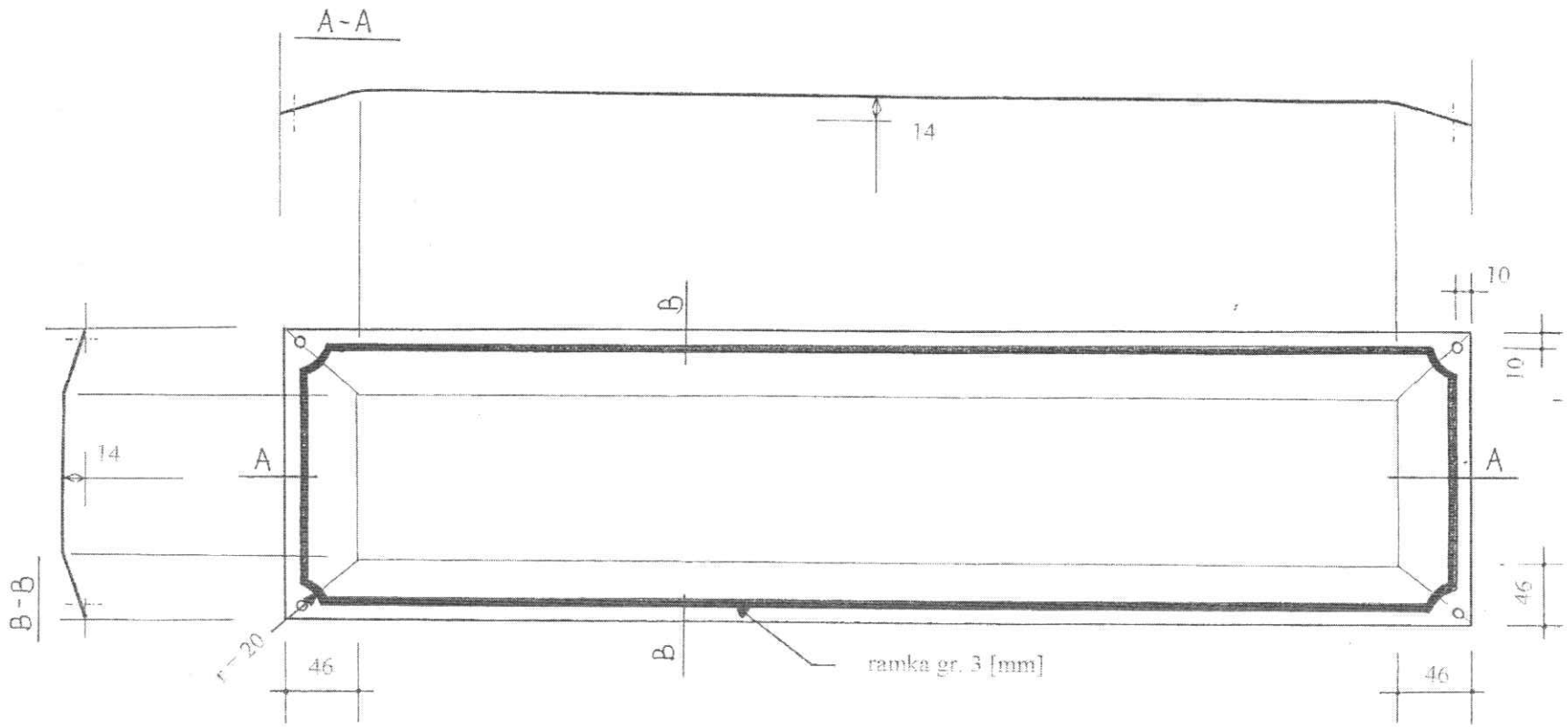
A-A
14
10
10
B
A
A
14
B-B
r=20
46
B
ramka gr. 3 [mm]
46
46